Work Order ID 67752

Wednesday, March 30, 2011 10:13:07 AM

Item ID: D3648-041 **Accept** **Setup Start** **Stop**

Revision ID:

Item Name: Driveshaft Tunnel Assembly

Start Date: 3/30/2011 **Start Qty:** 2.00 **Cust Item ID:**

Required Date: 4/1/2011 **Req'd Qty:** 2.00 **Customer:**

Reference:

Approvals: **Process Plan:** H **Date:** 11-03-30 **Tooling:** **Date:** **Run Start** **Stop**

QC: **Date:** **SPC (Y/N):** **Date:**

Sequence ID/ Work Center ID	Operation Description	Set Up/ Run Hours	Tool ID	Tool #	Plan Code	Accept Qty	Reject Qty	Reject Number	Insp. Stamp
Draw Nbr	**Revision Nbr**								
D3648	Rev B								
100	Pick Kit	0.00							
Packaging	**Memo**	0.00				2			
Packaging									
110		0.00							
Small Fab	Small Fab								
Small Fab	**Memo**	0.00				2			
	1-Assemble as per dwg D3648□2- Seal mating surface and all gaps as per dwg D3648 with□Proseal 700 fire wall sealant□ batch: M116669								
120	QC5- Inspect part completeness to step on W/O	0.00							
QC	**Memo**	0.00				2			
Quality Control									

Dart Aerospace Ltd

W/O:		WORK ORDER CHANGES					
DATE	STEP	PROCEDURE CHANGE	By	Date	Qty	Approval Chief Eng / Prod Mgr	Approval QC Inspector

Part No: _____ **PAR #:** _____ **Fault Category:** _____ **NCR:** Yes No **DQA:** _____ **Date:** _____

Resolution: _____ **Disposition:** _____ **QA: N/C Closed:** _____ **Date:** _____

NCR:		WORK ORDER NON-CONFORMANCE (NCR)						
DATE	STEP	Description of NC Section A	Corrective Action Section B			Verification Section C	Approval Chief Eng	Approval QC Inspector
			Initial Chief Eng	Action Description Chief Eng	Sign & Date			

NOTE: Date & initial all entries

Work Order ID 67752

Wednesday, March 30, 2011 10:13:08 AM

Item ID: D3648-041 **Accept** **Setup Start** **Stop**

Revision ID:

Item Name: Driveshaft Tunnel Assembly

Start Date: 3/30/2011 **Start Qty:** 2.00 **Cust Item ID:**

Required Date: 4/1/2011 **Req'd Qty:** 2.00 **Customer:**

Reference:

Run Start **Stop**

Approvals: **Process Plan:** _____ **Date:** _____ **Tooling:** _____ **Date:** _____

QC: _____ **Date:** _____ **SPC (Y/N):** _____ **Date:** _____

Sequence ID/ Work Center ID	Operation Description	Set Up/ Run Hours	Tool ID	Tool #	Plan Code	Accept Qty	Reject Qty	Reject Number	Insp. Stamp
130	Identify as per dwg & Stock Location:_____	0.00				11/5/19	(2)		
Packaging	**Memo**	0.00							
Packaging									
140	QC21- Final Inspection - Work Order Release	0.00					11/5/19		
QC	**Memo**	0.00							
Quality Control									

11-05-19 (2)

Dart Aerospace Ltd

W/O:		WORK ORDER CHANGES					
DATE	STEP	PROCEDURE CHANGE	By	Date	Qty	Approval Chief Eng / Prod Mgr	Approval QC Inspector

Part No: _____ **PAR #:** _____ **Fault Category:** _____ **NCR:** Yes No **DQA:** _____ **Date:** _____

Resolution: _____ **Disposition:** _____ **QA: N/C Closed:** _____ **Date:** _____

NCR:		WORK ORDER NON-CONFORMANCE (NCR)						
DATE	STEP	Description of NC Section A	Corrective Action Section B			Verification Section C	Approval Chief Eng	Approval QC Inspector
			Initial Chief Eng	Action Description Chief Eng	Sign & Date			

NOTE: Date & initial all entries

H:\fFORMS\Quality Assurance\approved QA\NCRWO RevE

Picklist Print

Wednesday, March 30, 2011 10:13:14 AM

Work Order ID: 67752

Parent Item: D3648-041

Parent Item Name: Driveshaft Tunnel Assembly

Start Date: 3/30/2011 **Required Date:** 4/1/2011

Start Qty: 2.00 **Required Qty:** 2.00

Comments:
IPP Rev:A New Issue 07-10-03 EC verified by: DD
IPP Rev:B Ecn 1113P 08-01-22 DD verified by:EC
IPP Rev:C ECN1162 08-04-02 DD verified by:EC

Component Item ID/ Item Name	Replacement Item ID	Mfg/ Purch	Bin Item	Primary Location	Last Location	Route Seq ID	Unit of Measure	Qty on Hand	Qty per Kit	Total Qty	Qty Issued	Date Issued	Status
AN960C10	NAS1149C0363 R	Purchased	No			100	Each	0.0000	40	80			
WASHER					M 113885		~~[illegible]~~			80 SB 11/05/18			
AN3C3A		Purchased	No			110	Each	156.0000	40	80			
Bolt										SB 11/05/18			
				Location		**Loc Qty**		**Loc Code**					
				ST350		156							
					116704	52							
					117161	104				80			
D3649-041		Manufactured	No			110	Each	5.0000	1	2			
Tunnel Bottom Panel Assembly										SB 11/05/18			
				Location		**Loc Qty**		**Loc Code**					
				ST190		5							
					65548	5				2			
D3650-041		Manufactured	No			110	Each	0.0000	1	2			
Tunnel Top Panel Assembly										SB 11/05/18			
D3651-041		Manufactured	No			110	Each	0.0000	1	2			
Aft Base Assembly						B 67754				SB 11/05/18			

Dart Aerospace Ltd

W/O:		WORK ORDER CHANGES					
DATE	STEP	PROCEDURE CHANGE	By	Date	Qty	Approval Chief Eng / Prod Mgr	Approval QC Inspector

Part No: _____ **PAR #:** _____ **Fault Category:** _____ **NCR:** Yes No **DQA:** _____ **Date:** _____

Resolution: _____ **Disposition:** _____ **QA: N/C Closed:** _____ **Date:** _____

NCR:		WORK ORDER NON-CONFORMANCE (NCR)						
DATE	STEP	Description of NC Section A	Corrective Action Section B			Verification Section C	Approval Chief Eng	Approval QC Inspector
			Initial Chief Eng	Action Description Chief Eng	Sign & Date			

NOTE: Date & initial all entries

H:\fFORMS\Quality Assurance\approved QA\NCRWO RevE

SHOP COPY
RETURN TO
ENGINEERING
UNCONTROLLED COPY
SUBJECT TO AMENDMENT
WITHOUT NOTICE
WORK ORDER
NO. 67752
11-03-30

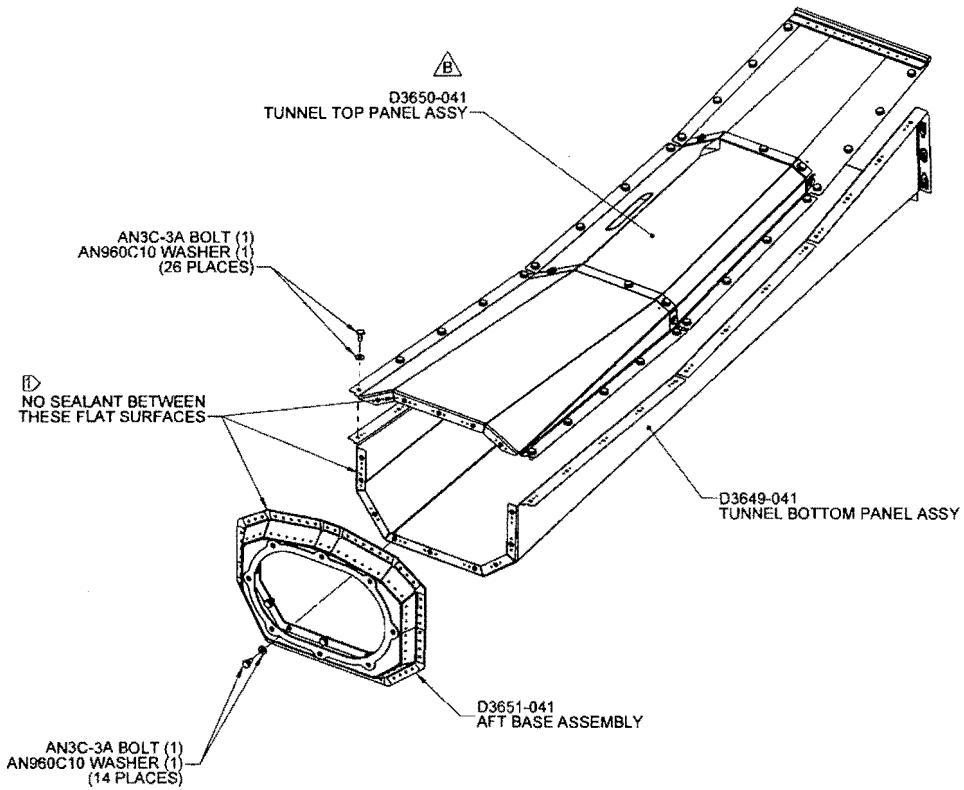

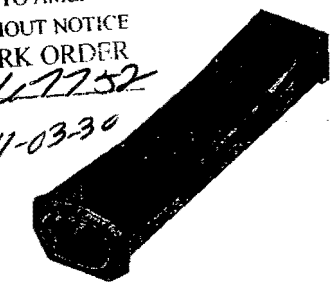

PART LIST

QTY -041	PART NUMBER	DESCRIPTION
X	D3648-041	DRIVE SHAFT TUNNEL ASSEMBLY
1	D3649-041	TUNNEL BOTTOM PANEL ASSEMBLY
1	D3650-041	TUNNEL TOP PANEL ASSEMBLY
1	D3651-041	AFT BASE ASSEMBLY
40	AN3C-3A	BOLT
40	AN960C10	WASHER

RELEASED
08-03-27

D3648-041 DRIVE SHAFT TUNNEL ASSEMBLY

NOTES:
1) SEAL MATING SURFACES AND ALL GAPS USING PROSEAL 700 FIRE WALL SEALANT EXCEPT WHERE NOTED
2) FINISH: NONE
3) TOLERANCES: PER DART QSI 018 UNLESS OTHERWISE NOTED
4) UNITS: INCHES UNLESS OTHERWISE NOTED
5) BREAK SHARP EDGES: 0.005 TO 0.010 MAX
6) IDENTIFICATION: IDENTIFY WITH DART P/N D3648-041 USING FINE POINT PERMANENT INK MARKER
7) TORQUE FASTENERS TO 15-25 in-lb
8) WEIGHT: 9.2 lbs

REV.	DESCRIPTION	BY	DATE
B	UPDATE WITH REVISED D3650-041	RF	08.01.07
A	NEW ISSUE	RF	07.11.07

DESIGN	RF	DART AEROSPACE LTD HAWKESBURY, ONTARIO, CANADA	
DRAWN	RF		
CHECKED		DRAWING NO. D3648	REV. B
MFG. APPR.			SHEET 1 OF 1
APPROVED		TITLE DRIVE SHAFT TUNNEL ASSY	SCALE 1:6
DE APPR.			
DATE	08.01.07		

Dart Aerospace Ltd

W/O:		WORK ORDER CHANGES					
DATE	STEP	PROCEDURE CHANGE	By	Date	Qty	Approval Chief Eng / Prod Mgr	Approval QC Inspector

Part No: _____ **PAR #:** _____ **Fault Category:** _____ **NCR:** Yes No **DQA:** _____ **Date:** _____

Resolution: _____ **Disposition:** _____ **QA: N/C Closed:** _____ **Date:** _____

NCR:		WORK ORDER NON-CONFORMANCE (NCR)						
DATE	STEP	Description of NC Section A	Corrective Action Section B			Verification Section C	Approval Chief Eng	Approval QC Inspector
			Initial Chief Eng	Action Description Chief Eng	Sign & Date			

NOTE: Date & initial all entries

H:\fFORMS\Quality Assurance\approved QA\NCRWO RevE